SPECIFICATIONS

Material: HEXSEALS: Silicone rubber conforms to A-A-59588 Class III, GR 60 unless otherwise specified.
Mounting Nut: HEXSEALS: Brass, nickel-plated (unless otherwise noted)
Temperature Range: HEXSEALS: -94°F to +400°F
Pressure Range: Exceeds 15 psi internal and 1500 psi external.
Operational Life: 50,000 actuations (minimum).
Shelf Life: Excess of 25 years.
Resistant to: Salt spray, sunlight, ozone, weather, fungus, and most acids and lubricating oils
Agency Recognition: E-SEELS and HEXSEALS are UL-listed to UL Std. 50 types 1-13, and meet CSA standards.
Installation: If a reducing adaptor is required - see page 14 of HEXSEAL catalog HEX200 for part numbers and drawing.

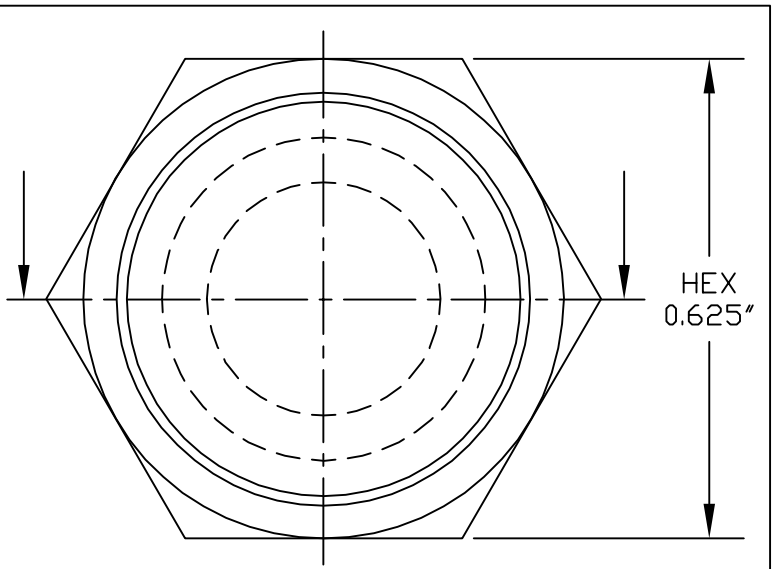

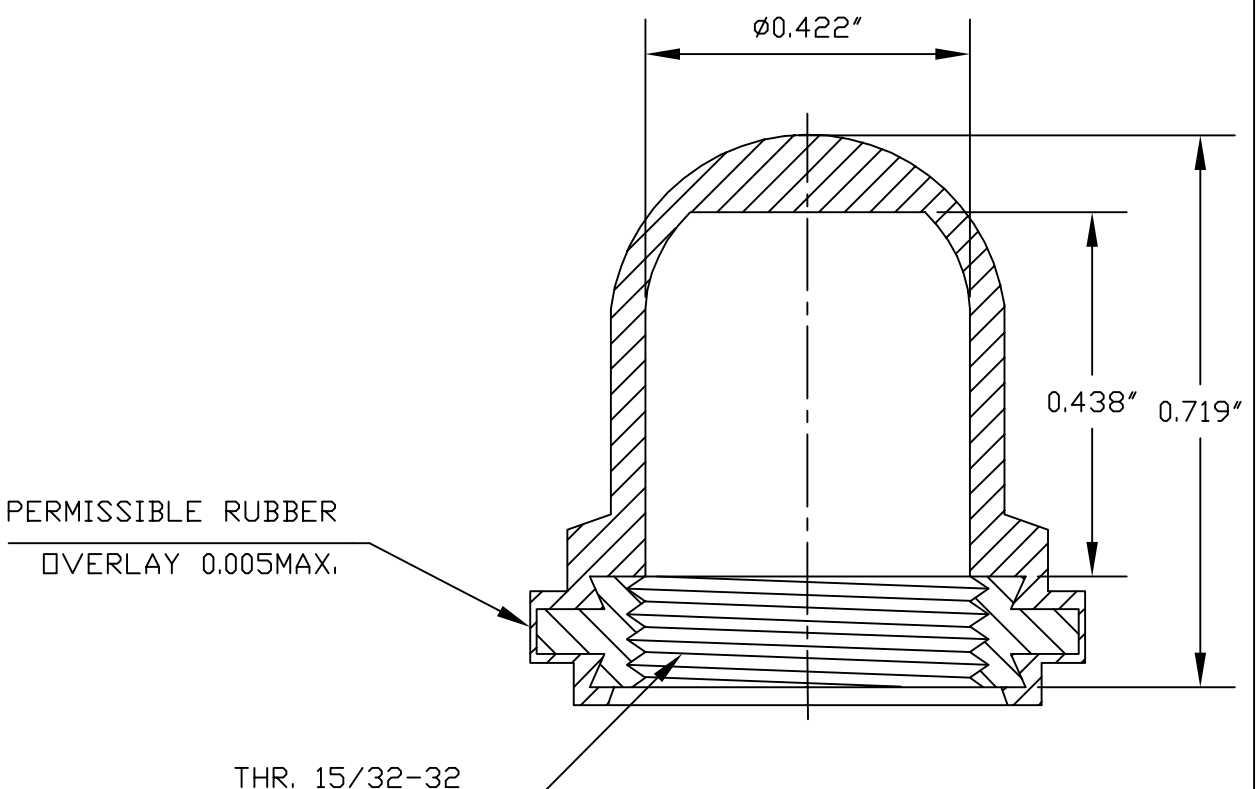

REV.	DESCRIPTION		DATE
J	MAT'L CHANGED	S.GOK	07-13-09
I	CAD COMPUTER GENERATED		9-23-02
H	UPDATED, ADDED ORDER NUMBERS, DWG NO. WAS 12/31/SERIES	W.P.	11-24-76

MAXIMUM AND MINIMUM MEASUREMENTS ARE STATED DIRECTLY ON EACH DIMENSION.

MAT'L: SILICONE RUBBER A-A-59588 Class III, Gr.60

FINISH: GRAY

TITLE: BOOT, PUSH BUTTON SWITCH (NC3030)

ENG.	M.MORSE	1-21-60
DWN.	S.ANDREWS	1-21-60
CHKD.	B.GLICKSMAN	1-21-60

APM-HEXSEAL CORPORATION

SCALE 4 : 1

DWG. NO. NC3030 HEXSEAL ®

THIS DRAWING COVERS PROPRIETARY ITEM AND IS THE PROPERTY OF THE APM-HEXSEAL CORPORATION.
THIS DRAWING IS NOT TO BE COPIED OR USED WITHOUT THE WRITTEN APPROVAL OF AN OFFICER OF THE APM-HEXSEAL CORPORATION.